Topic B: Specifications

IFEC 2011

Maurício B.R. Corrêa
Federal University of Campina Grande - Brazil

System Layout

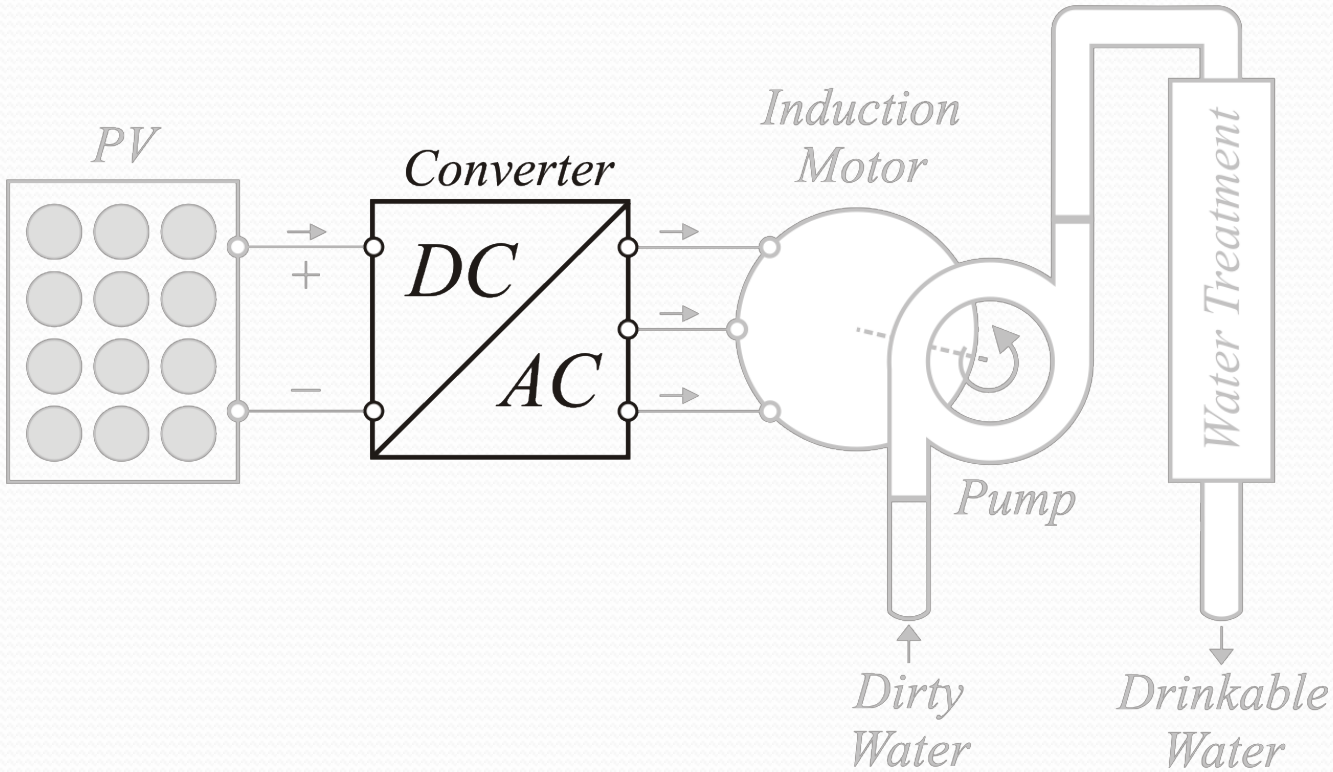

Low Power Induction Motor Drive System Supplied From a Single Photovoltaic Panel For an Emergency Water Treatment Device

PV panel (1/2)

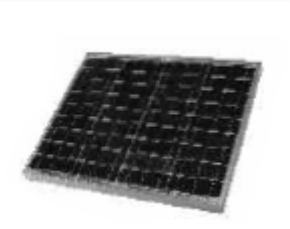

Specifications

Electrical Performance under Standard Test Conditions (*STC)	
Maximum Power (Pmax)	205W (+5%／−5%)
Maximum Power Voltage (Vmpp)	26.6V
Maximum Power Current (Impp)	7.71A
Open Circuit Voltage (Voc)	33.2V
Short Circuit Current (Isc)	8.36A
Max System Voltage	600V
Temperature Coefficient of Voc	-1.20×10^{-1} V/℃
Temperature Coefficient of Isc	5.02×10^{-3} A/℃

*STC : Irradiance 1000W/m^2, AM1.5 spectrum, cell temperture 25℃

Electrical Performance at 800W/m^2,*NOCT, AM1.5	
Maximum Power (Pmax)	145W
Maximum Power Voltage (Vmpp)	23.5V
Maximum Power Current (Impp)	6.17A
Open Circuit Voltage (Voc)	29.9V
Short Circuit Current (Isc)	6.82A

http://www.kyocerasolar.com.br/site/arquivos/produtos/70.pdf

PV panel (2/2)

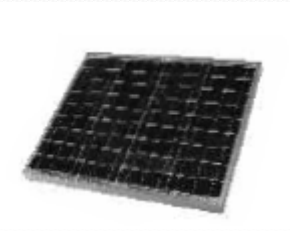

■ Cells	
Number per Module	54

■ Module Characteristics	
Length × Width × Depth	1500mm(59.1in)×990mm(39.0in)×36mm(1.4in)
Weight	18.5kg(40.8lbs.)
Cable	(+)760mm(29.9in),(-)1840mm(72.4in)

■ Junction Box Characteristics	
Length × Width × Depth	100mm(3.9in)×108mm(4.3in)×15mm(0.6in)
IP Code	IP65

■ Others	
*Operating Temperature	−40℃～90℃
Maximum Fuse	15A

Motor Details

Characteristics
Output: 0.16 HP
Poles: 4
Frequency: 60 Hz
Torque: 0.669 Nm
Voltage: 220/380 V
Frame: 71
RPM: 1715
Full Load Amps: 0.734/0.425 A
Efficiency (100%): 66
Power factor (100%): 0.65
Insulation: F
Noise: 47 dB(A)
No load current: 0.6/0.37 A
In Rush (Times): 4.7

Pump Details (1/3)

Standard Specifications:

Body	brass
Capacity	15 to 140 gph
Nominal speed	1,725 rpm
Max. discharge pressure	250 psi
Rotation	clockwise
Dry weight	approx. 2.40 lbs
Strainer area	3.25 sq in
Self-priming (water)	6 ft max. lift

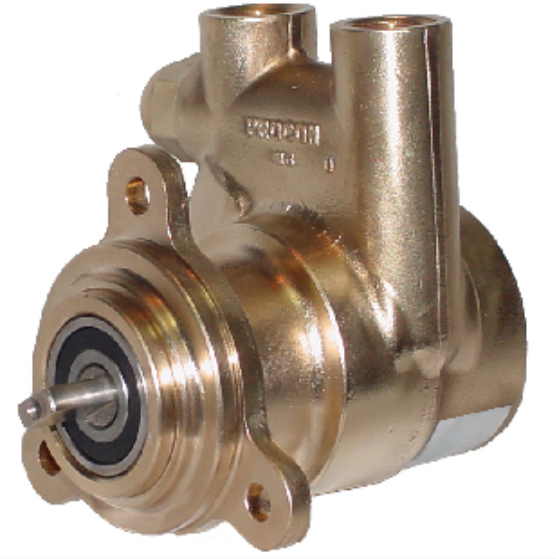

http://www.proconpumps.com/Series%201.htm

Pump Details (2/3)

Capacities and Horsepower Requirements

Series 1, 2 & 3 Nominal volume at 1725 RPM (see note on page 14)										
Flow Rate (GPH)	Gallons Per Hour					Brake Horsepower				
	Pressure (PSI)					Pressure (PSI)				
	50	100	150	200	250	50	100	150	200	250
140	143	141	139	137	135	0.17	0.28	0.40	0.52	0.63
125	128	126	124	122	120	0.16	0.26	0.36	0.47	0.57
110	111	109	107	105	103	0.15	0.25	0.34	0.44	0.54
100	102	100	98	96	94	0.13	0.20	0.28	0.35	0.42
80	82	80	78	76	74	0.12	0.18	0.25	0.32	0.39
70	72	70	68	66	64	0.11	0.17	0.24	0.30	0.37
60	62	60	58	56	54	0.10	0.16	0.23	0.29	0.35
50	52	50	48	46	44	0.09	0.15	0.21	0.27	0.33
35	37	35	33	31	29	0.08	0.14	0.19	0.24	0.29
25	27	25	23	21	19	0.07	0.12	0.17	0.22	0.27
15	17	15	13	11	---	0.06	0.10	0.15	0.19	---

Pump Details (3/3)

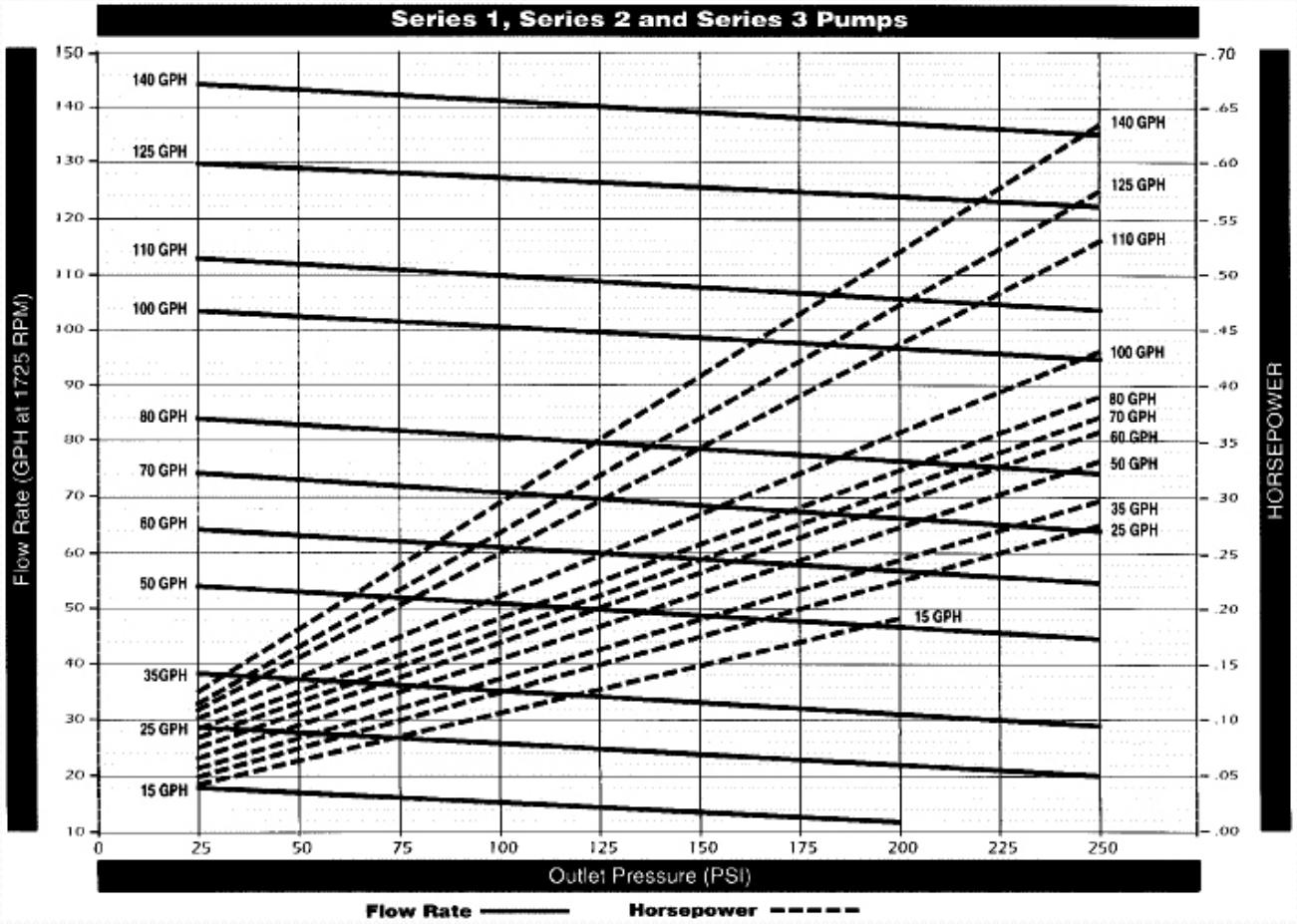

Functional Specification

- Effective induction motor control to ensure that maximum available power is transferred from panel to a mechanical pump;
- Autonomous control for start up and shut down;
- Minimum need of human interference (a single on/off switch);
- Motor start up and shut down must be a function of: sun light, on/off button and water storage tank level (NO/NC contact);
- Safety conditions to allow panel cleaning procedure;

Functional Specification

- Effective induction motor control to ensure that maximum available power is transferred from panel to a mechanical pump;
- Autonomous control for start up and shut down;
- Minimum need of human interference (a single on/off switch);
- Motor start up and shut down must be a function of: sun light, on/off button and water storage tank level (NO/NC contact);
- Safety conditions to allow panel cleaning procedure;

Functional Specification

- Effective induction motor control to ensure that maximum available power is transferred from panel to a mechanical pump;
- Autonomous control for start up and shut down;
- Minimum need of human interference (a single on/off switch);
- Motor start up and shut down must be a function of: sun light, on/off button and water storage tank level (NO/NC contact);
- Safety conditions to allow panel cleaning procedure;

Functional Specification

- Effective induction motor control to ensure that maximum available power is transferred from panel to a mechanical pump;
- Autonomous control for start up and shut down;
- Minimum need of human interference (a single on/off switch);
- Motor start up and shut down must be a function of: sun light, on/off button and water storage tank level (NO/NC contact);
- Safety conditions to allow panel cleaning procedure;

Functional Specification

- Effective induction motor control to ensure that maximum available power is transferred from panel to a mechanical pump;
- Autonomous control for start up and shut down;
- Minimum need of human interference (a single on/off switch);
- Motor start up and shut down must be a function of: sun light, on/off button and water storage tank level (NO/NC contact);
- Safety conditions to allow panel cleaning procedure;

Functional Specification

- Effective induction motor control to ensure that maximum available power is transferred from panel to a mechanical pump;
- Autonomous control for start up and shut down;
- Minimum need of human interference (a single on/off switch);
- Motor start up and shut down must be a function of: sun light, on/off button and water storage tank level (NO/NC contact);
- Safety conditions to allow panel cleaning procedure.

Aditional Information

- More information will be posted as soon as I return to Brazil. Thanks!

Success!

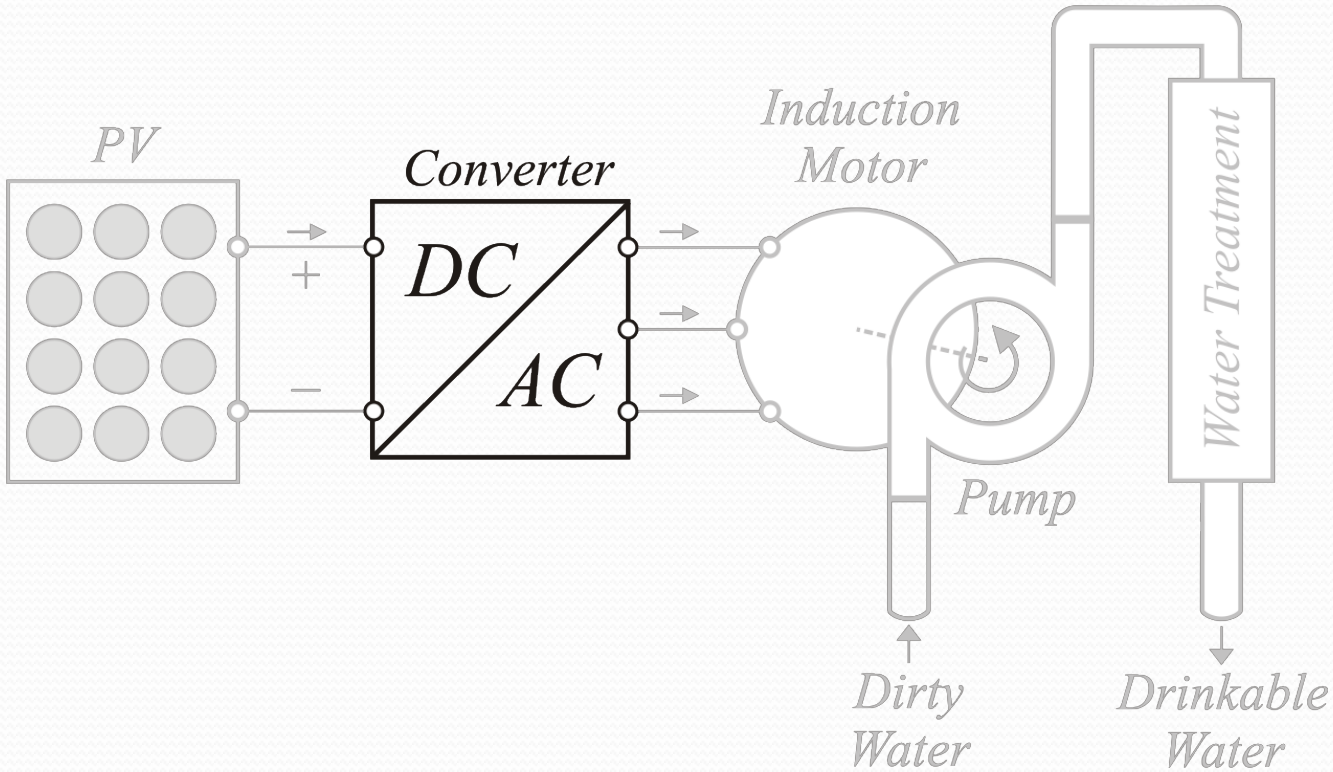
PV
+
−
Converter
DC
AC
Induction
Motor
Pump
Water Treatment
Dirty
Water
Drinkable
Water